ABA – BELLA™

HIGH-END ALUMINIUM BASEBOARD

LA DOLCE VITA WITH BELLA

The high-end Bella baseboard is undoubtedly the most beautiful offered on the market. Its breathtaking design and sturdy aluminum-extruded facade make it the ideal choice for residential and commercial locations. The Bella is available in two densities: 150 W or 250 W per linear foot.

- **CLEAN AND HIGH-END FINISH**
- **EXTREMELY SOLID, IMPACT AND RUST RESISTANT** MADE OF EXTRUDED ALUMINUM
- **FIT FOR RESIDENTIAL AND COMMERCIAL ENVIRONMENTS**
- **TOTALLY QUIET**

IDEAL FOR:
kitchen, living room, bedroom, basement, commercial space, office

COLORS

- **standard:** white
- **Orora (optional):** refer to www.stelpro.com/en-US/Orora

FINISH

- epoxy-polyester powdercoat

MANUFACTURING

- 22-gauge steel cabinet
- 11-gauge equivalent extruded aluminum with molded and curved end-caps
- discreet air inlet: air enters through the front of the unit and exits from the top
- thermal protection with automatic reset
- full-length wireway

ELEMENT

- single tubular, stainless steel sheathed element with boxed aluminum fins for improved heat dissipation; the element is securely fastened at its centre, floating in nylon sleeves at each end, eliminating expansion and contraction noises

CONTROL

- wall thermostat (not included) – the use of an electronic thermostat is strongly recommended
- built-in mechanical single pole or double pole thermostat, installed in the left or right junction box (optional)
- low voltage relay kit installed in the left or right junction box (optional)
- disconnect switch (optional)

INSTALLATION

- surface mounted
- wiring compartment at both ends of unit

WARRANTY

- five years, *lifetime warranty on the heating element (for original owner)

FC_BA_US_250325

STELPRO

Stelpro reserves the right to modify at any time the description, manufacturing, or price of its products. **Additionally, Stelpro may apply restocking fees or refuse a refund based on one or more of the following criteria: optional color, custom product, assembly with low-demand options.** For the latest product information and prices regarding the products, please visit the website www.stelpro.com.

TECHNICAL SPECIFICATIONS

DENSITY OF 250 W PER LINEAR FOOT FOR COMMERCIAL USE ONLY			DENSITY OF 150 W PER LINEAR FOOT FOR RESIDENTIAL AND COMMERCIAL USE			VOLTAGE	TOTAL LENGTH	WALL LENGTH	WEIGHT
CODE	WATTS	BTU/H	CODE	WATTS	BTU/H	VOLTS	IN.	IN.	LB
ABA03019W	300	1024	**---**	---	---	120	23 1/2	23	5.5
ABA03089W	300	1024	**---**	---	---	208	23 1/2	23	5.5
ABA03029W	300/225	1024/768	**---**	---	---	240/208	23 1/2	23	5.5
ABA0501W	500	1706	**ABAL0301W**	300	1024	120	28 13/16	28 5/16	6.5
ABA0508W	500	1706	**ABAL0308W**	300	1024	208	28 13/16	28 5/16	6.5
ABA0502W	500/375	1706/1280	**ABAL0302W**	300/225	1024/768	240/208	28 13/16	28 5/16	6.5
ABA0507W	500	1706	**---**	300	1024	277	28 13/16	28 5/16	6.5
ABA0751W	750	2560	**ABAL0451W**	450	1536	120	38 1/2	38	8.0
ABA0758W	750	2560	**ABAL0458W**	450	1536	208	38 1/2	38	8.0
ABA0752W	750/560	2560/1911	**ABAL0452W**	450/340	1536/1160	240/208	38 1/2	38	8.0
ABA0757W	750	2560	**ABAL0457W**	450	1536	277	38 1/2	38	8.0
ABA0755W	750	2560	**---**	450	1536	480	38 1/2	38	8.0
ABA1001W	1000	3413	**ABAL0601W**	600	2048	120	48 3/8	47 7/8	9.7
ABA1008W	1000	3413	**ABAL0608W**	600	2048	208	48 3/8	47 7/8	9.7
ABA1002W	1000/750	3413/2560	**ABAL0602W**	600/450	2048/1536	240/208	48 3/8	47 7/8	9.7
ABA1007W	1000	3413	**ABAL0607W**	600	2048	277	48 3/8	47 7/8	9.7
ABA1005W	1000	3413	**---**	600	2048	480	48 3/8	47 7/8	9.7
ABA1251W	1250	4266	**ABAL0751W**	750	2560	120	58 3/16	57 11/16	11.4
ABA1258W	1250	4266	**ABAL0758W**	750	2560	208	58 3/16	57 11/16	11.4
ABA1252W	1250/940	4266/3208	**ABAL0752W**	750/560	2560/1911	240/208	58 3/16	57 11/16	11.4
ABA1257W	1250	4266	**ABAL0757W**	750	2560	277	58 3/16	57 11/16	11.4
ABA1255W	1250	4266	**ABAL0755W**	750	2560	480	58 3/16	57 11/16	11.4
ABA1501W	1500	5119	**ABAL0901W**	900	3071	120	67 3/16	66 11/16	13.2
ABA1508W	1500	5119	**ABAL0908W**	900	3071	208	67 3/16	66 11/16	13.2
ABA1502W	1500/1125	5119/3839	**ABAL0902W**	900/675	3071/2304	240/208	67 3/16	66 11/16	13.2
ABA1507W	1500	5119	**ABAL0907W**	900	3071	277	67 3/16	66 11/16	13.2
ABA1505W	1500	5119	**ABAL0905W**	900	3071	480	67 3/16	66 11/16	13.2
---	1750	5972	**ABAL1051W**	1050	3583	120	76 7/8	76 3/8	15.0
ABA1758W	1750	5972	**ABAL1058W**	1050	3583	208	76 7/8	76 3/8	15.0
ABA1752W	1750/1310	5972/4488	**ABAL1052W**	1050/790	3583/2696	240/208	76 7/8	76 3/8	15.0
ABA1757W	1750	5972	**ABAL1057W**	1050	3583	277	76 7/8	76 3/8	15.0
ABA1755W	1750	5972	**ABAL1055W**	1050	3583	480	76 7/8	76 3/8	15.0
---	2000	6825	**ABAL1201W**	1200	4095	120	84 13/16	84 5/16	16.9
ABA2008W	2000	6825	**ABAL1208W**	1200	4095	208	84 13/16	84 5/16	16.9
ABA2002W	2000/1500	6825/5119	**ABAL1202W**	1200/900	4095/3071	240/208	84 13/16	84 5/16	16.9
ABA2007W	2000	6825	**ABAL1207W**	1200	4095	277	84 13/16	84 5/16	16.9
ABA2005W	2000	6825	**ABAL1205W**	1200	4095	480	84 13/16	84 5/16	16.9
ABA2258W	2250	7679	**ABAL1358W**	1350	4607	208	94 11/16	94 3/16	18.8
ABA2252W	2250/1690	7679/5767	**ABAL1352W**	1350/1010	4607/3447	240/208	94 11/16	94 3/16	18.8
ABA2257W	2250	7679	**ABAL1357W**	1350	4607	277	94 11/16	94 3/16	18.8
ABA2255W	2250	7679	**ABAL1355W**	1350	4607	480	94 11/16	94 3/16	18.8
ABA2508W	2500	8532	**ABAL1508W**	1500	5119	208	103 1/2	103	20.7
ABA2502W	2500/1875	8532/6399	**ABAL1502W**	1500/1125	5119/3839	240/208	103 1/2	103	20.7
ABA2507W	2500	8532	**ABAL1507W**	1500	5119	277	103 1/2	103	20.7
ABA2505W	2500	8532	**ABAL1505W**	1500	5119	480	103 1/2	103	20.7

Consult the optional colors chart or contact your Stelpro representative for all other colors.
--- not available

Stelpro reserves the right to modify at any time the description, manufacturing, or price of its products. **Additionally, Stelpro may apply restocking fees or refuse a refund based on one or more of the following criteria: optional color, custom product, assembly with low-demand options.** For the latest product information and prices regarding the products, please visit the website www.stelpro.com.

ACCESSORIES

PRODUCT	DESCRIPTION
BA1T1W	built-in single pole thermostat [120 V-600 V]
BA2T1W	built-in double pole thermostat [120 V-600 V]
BARE153	built-in electronic low voltage relay [15 A @ 120 V-347 V]
BARE156	built-in electronic low voltage relay [6 A @ 600 V]
BARE153T*	built-in electronic low voltage relay c/w transformer 24 V [15 A @ 208 V-347 V]
BARM120T	built-in electromechanical relay c/w transformer 24 V [3000 W @ 120 V]
BARM240T	built-in electromechanical relay c/w transformer 24 V [6000 W @ 240 V and 5200 W @ 208 V]
BARM347T	built-in electromechanical relay c/w transformer 24 V [6000 W @ 347 V]
BARM347C	built-in electromechanical relay w/o transformer 24 V [6000 W @ 120-347 V]
BAR841D1036	built-in electromechanical low voltage relay w/o transformer 24 V [6000 W @ 600 V]
BADIS	disconnect switch [up to 277 V max 15 A]
BADIS6	disconnect switch [600 V]

Electronic relays can receive a PWM (pulsed width modulation) or digital (on/off) signal.

*Transformer is supplying 27.5 Vac to thermostat when triac is used at 347 Vac. Here is the voltage supplied by the transformer when triac is used at other voltages:

VOLTAGE TRIAC			
347 Vac	**277 Vac**	**240 Vac**	**208 Vac**
27.5 V	**21.2 V**	**19.0 V**	**16.5 V**

TECHNICAL DRAWINGS

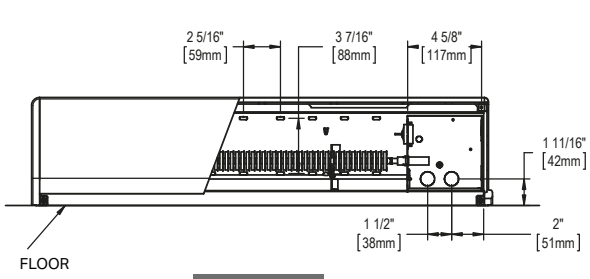

FRONT

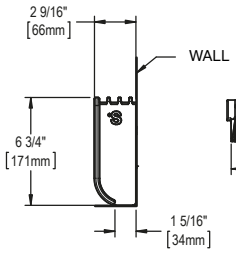

SIDE

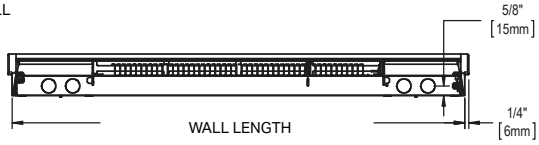

BOTTOM

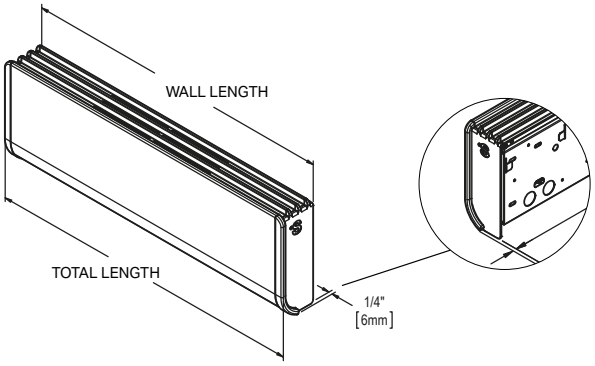

Stelpro reserves the right to modify at any time the description, manufacturing, or price of its products. **Additionally, Stelpro may apply restocking fees or refuse a refund based on one or more of the following criteria: optional color, custom product, assembly with low-demand options.** For the latest product information and prices regarding the products, please visit the website www.stelpro.com.

Stelpro reserves the right to modify at any time the description, manufacturing, or price of its products. **Additionally, Stelpro may apply restocking fees or refuse a refund based on one or more of the following criteria: optional color, custom product, assembly with low-demand options.** For the latest product information and prices regarding the products, please visit the website www.stelpro.com.