fantech®
a systemair company

bathfan SF50-80-100

Item #: **#484305**

Operating Mode: **120V 1~ 60Hz**

Ceiling-mount and wall-mount models with various options for small to large bathrooms

- Selectable Airflow*
- Quiet Operation
- LED*, Humidity*, Occupancy*
- Low-Profile Design
- Wall/Ceiling Mounting
- ETL listed for use over bathtubs and showers when connected to GFCI protected branch circuit (ceiling installation only)

*select models

Find more details in our online catalogue

Technical parameters

Nominal data		
Voltage (nominal)	120	V
Frequency	60	Hz
Phases	1~	
Input power	12	W
Input current	0.25	A
Air flow	50; 80; 100	cfm
Temperature of transported air	max 104	°F
Protection/Classification		
Insulation class	A	
Certificate	Energy Star, California 24	
Dimensions and weights		
Duct dimension; Circular, outlet	4	in.
Weight	6.8	lb
Optional		
Duct connection type	Circular	
Motor type	DC	

Performances

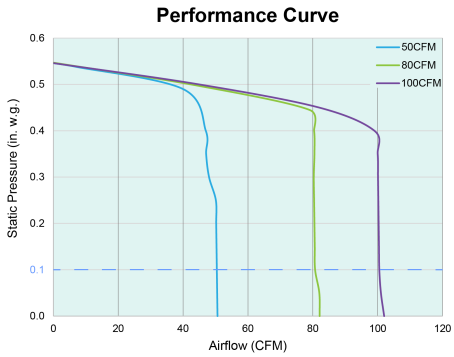

HVI Certified Rating(s)

Static Pressure (In. Wg.)	Rated Airflow (CFM)	Rated Noise (Sones)	Rated Power (W)
0.1	50-80-100	0.6-1.0-1.5	12.0

Dimensions

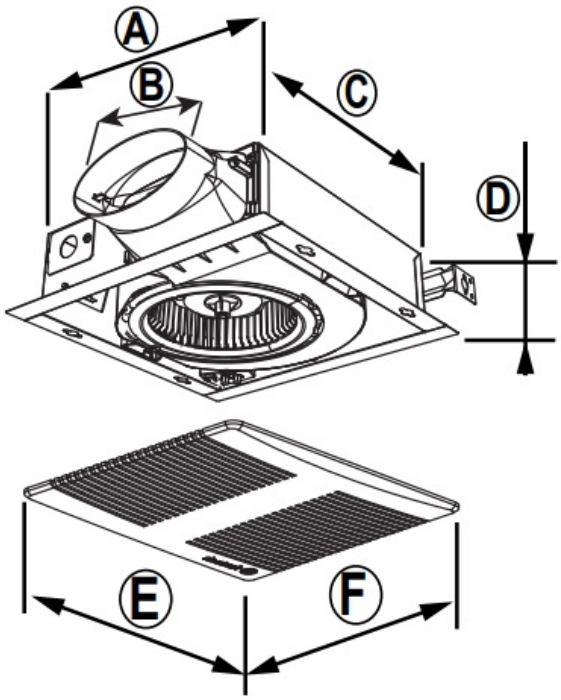

A	B	C	D	E	F
10 1/4 (260)	4 (102)	10 1/4 (260)	3 3/8 (86)	13 3/4 (321)	13 (330)

Dimensions are in inches (mm).

Wiring

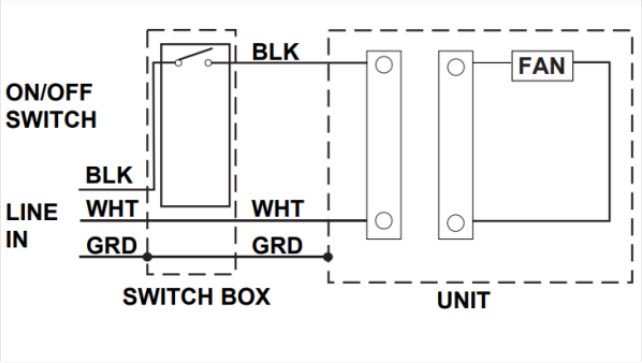

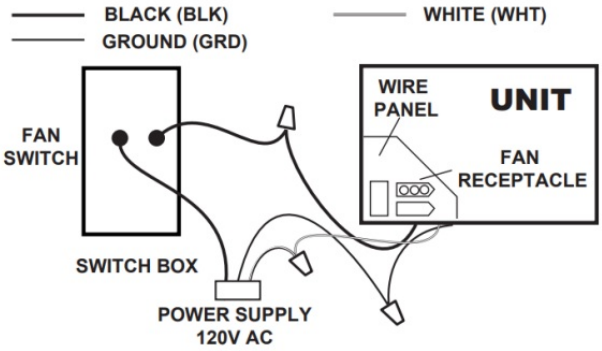

Accessories

FD60EM Electronic timer (411386)
HS 4W External Louver Exhaust (45151)
bathfan Ceil. Radiation Damper (484374)
DHS 05 Humidity/Fan control (494044)
FIDT 4 Insulated Flex Duct (411061)
4x3 Reducer Bulk pack, 20pcs (484321)
Ceiling Radiation Damper,Small (98599)

Documents

E2161 bathfan Comparison Brochure EN
484287 IOM Bathfan Select FIT Series EN
484330 Select Fit Submittal Sheet
484277 Select Fit Spec Sheet EN
BATHFAN_CSI_SPECIFICATION.ZIP